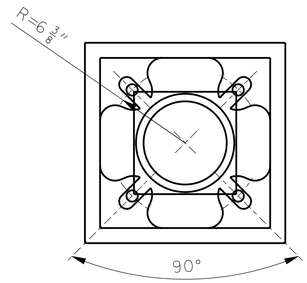

BOLT CIRCLE

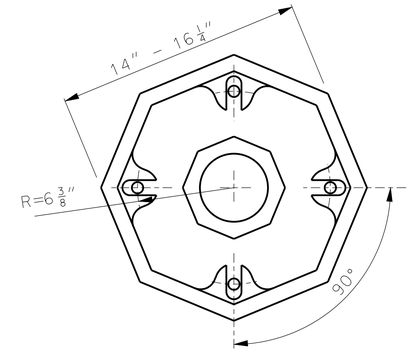

BOLT CIRCLE

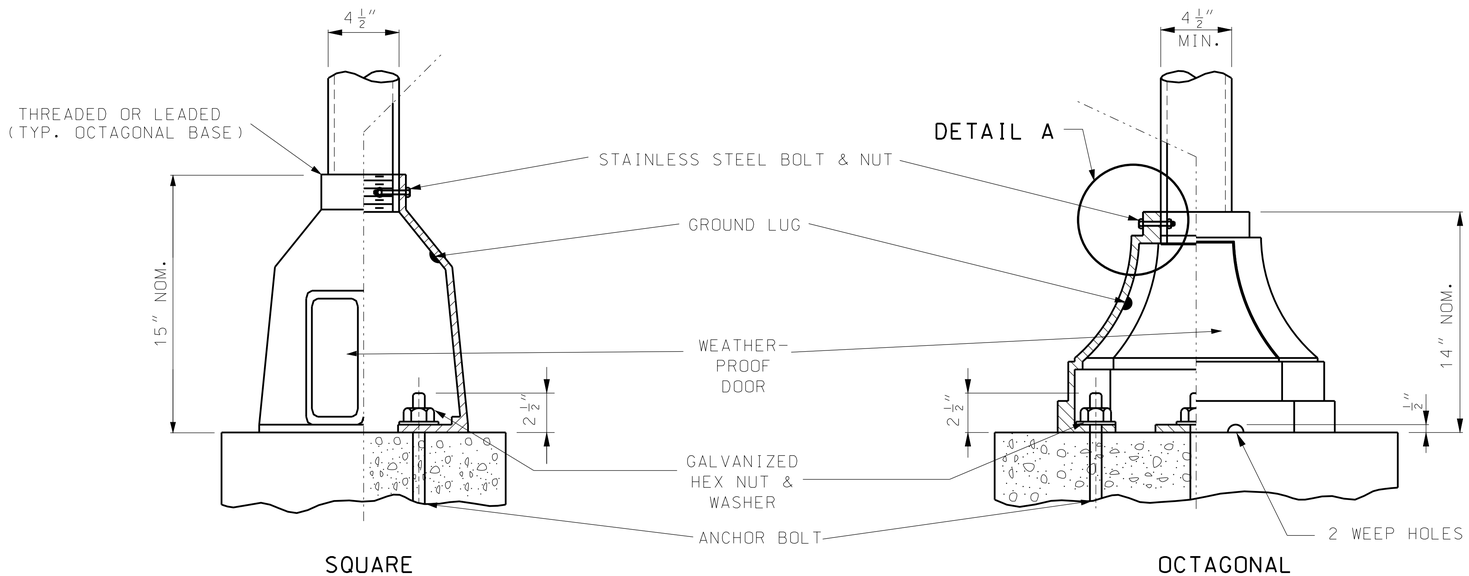

CAST BASE

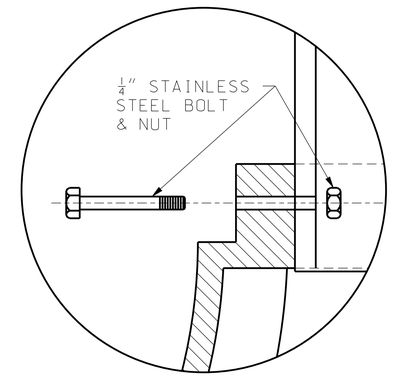

DETAIL A

BOLT LENGTH	VERT. HT. A	THREAD LEN. B	DIA. C
INCHES	INCHES	INCHES	INCHES
19	17	1.50	0.625
57	51	7.00	1.250
79	73	7.50	1.500
94	88	8.00	1.750
121	115	8.50	2.000
120	114	9.00	2.250
146	140	9.50	2.500

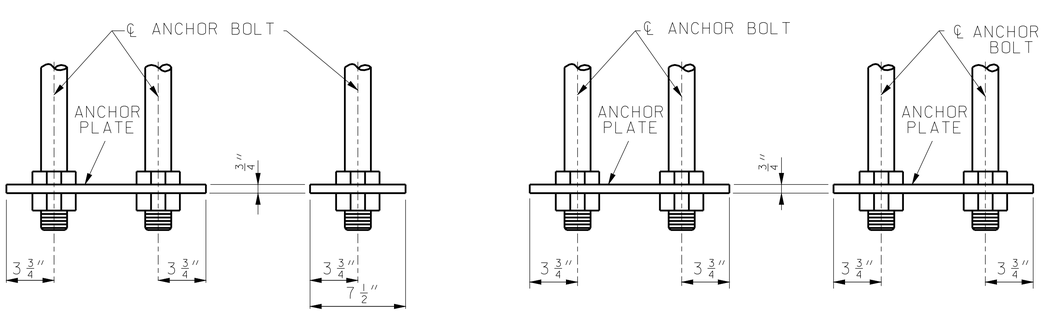

SIDE VIEW END VIEW

TWO BOLTS PER PLATE

HEX NUT OR 5/16" FILLET WELD ALL AROUND BOTH SIDES

SIDE VIEW END VIEW

FOUR BOLTS PER PLATE

HEX NUT OR 5/16" FILLET WELD ALL AROUND BOTH SIDES

OPTIONAL STEEL PLATE FOR ANCHOR BOLTS

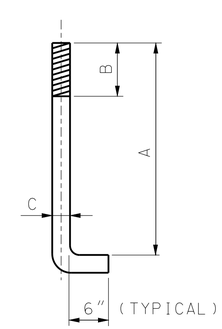

ANCHOR BOLT

NOTE:
ALL ANCHOR BOLTS SHALL BE FULLY GALVANIZED.

MISSOURI HIGHWAYS AND TRANSPORTATION COMMISSION
105 WEST CAPITOL
JEFFERSON CITY, MO 65102
1-888-ASK-MODOT (1-888-275-6636)

STATE OF MISSOURI
KATHRYN PHILLIPS HARVEY
NUMBER PE-23751
PROFESSIONAL ENGINEER
THIS SHEET HAS BEEN SIGNED, SEALED AND DATED ELECTRONICALLY.

TRAFFIC SIGNALS

POST BASES

DATE EFFECTIVE: 02/01/2008
DATE PREPARED: 8/26/2009

902.30P

SHEET NO. 2 OF 2

IF A SEAL IS PRESENT ON THIS SHEET IT HAS BEEN ELECTRONICALLY SEALED AND DATED.